www.omseni.com

OM SENI

MC78FC00 Series Micropower Voltage Regulator

The MC78FC00 series voltage regulators are specifically designed for use as a power source for video instruments, handheld communication equipment, and battery powered equipment.

The MC78FC00 series voltage regulator ICs feature a high accuracy output voltage and ultra−low quiescent current. Each device contains a voltage reference unit, an error amplifier, a driver transistor, and resistors for setting output voltage, and a current limit circuit. These devices are available in SOT−89 surface mount packages, and allow construction of an efficient, constant voltage power supply circuit.

Features

- Ultra−Low Quiescent Current of 1.1 μA Typical
- Ultra−Low Dropout Voltage (100 mV at 10 mA)
- Large Output Current (up to 120 mA)
- Excellent Line Regulation (0.1%)
- Wide Operating Voltage Range (2.0 V to 10 V)
- High Accuracy Output Voltage (±2.5%)
- Wide Output Voltage Range (2.0 V to 6.0 V)
- Surface Mount Package (SOT−89)
- These are Pb−Free Devices

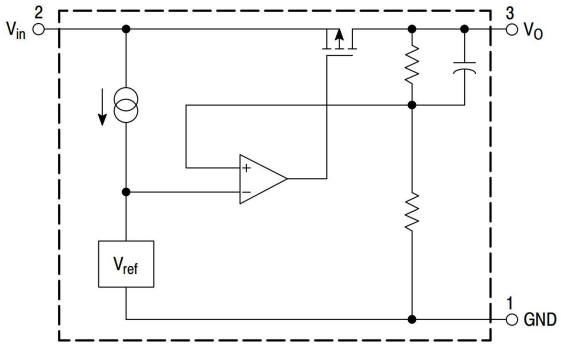

This device contains 11 active transistors.

Figure 1. Representative Block Diagram

MICROPOWER ULTRA−LOW QUIESCENT CURRENT VOLTAGE REGULATORS

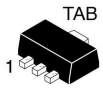

SOT−89
H SUFFIX
CASE 1213

MARKING DIAGRAM

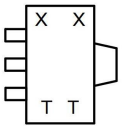

X = Device Code
T = Traceability Information

PIN CONNECTIONS

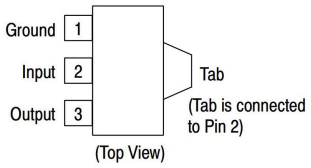

(Top View)

STANDARD APPLICATION

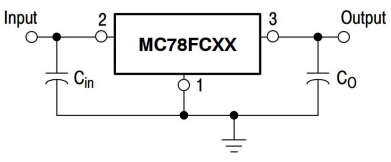

www.omseni.com

OM SENI

MAXIMUM RATINGS (T_C = 25°C, unless otherwise noted.)

Rating	Symbol	Value	Unit
Input Voltage	V_{CC}	10	Vdc
Power Dissipation and Thermal Characteristics Maximum Power Dissipation Case 1213 (SOT−89) H Suffix Thermal Resistance, Junction−to−Ambient	 P_D $R_{\theta JA}$	 900 111	mW °C/W
Operating Junction Temperature	T_J	125	°C
Operating Ambient Temperature	T_A	−30 to +80	°C
Storage Temperature Range	T_{stg}	−40 to +125	°C

Stresses exceeding Maximum Ratings may damage the device. Maximum Ratings are stress ratings only. Functional operation above the Recommended Operating Conditions is not implied. Extended exposure to stresses above the Recommended Operating Conditions may affect device reliability.

1. ESD data available upon request.

ELECTRICAL CHARACTERISTICS (V_{in} = V_O + 1.0 V, I_O = 10 mA, T_J = 25°C [Note 2], unless otherwise noted.)

Characteristic	Symbol	Min	Typ	Max	Unit
Output Voltage 30HT1 Suffix (V_{in} = 5.0 V) 33HT1 Suffix (V_{in} = 6.0 V) 40HT1 Suffix (V_{in} = 7.0 V) 50HT1 Suffix (V_{in} = 8.0 V)	V_O	 2.925 3.218 3.900 4.875	 3.0 3.3 4.0 5.0	 3.075 3.382 4.100 5.125	V
Line Regulation V_{in} = [V_O + 1.0] V to 10 V, I_O = 10 mA	Reg_{line}	–	0.1	–	mV
Load Regulation V_{in} = [V_O + 1.0], I_O = 1.0 to 10 mA	Reg_{load}	–	40	80	mV
Output Current 30HT1 Suffix (V_{in} = 5.0 V) 33HT1 Suffix (V_{in} = 6.0 V) 40HT1 Suffix (V_{in} = 7.0 V) 50HT1 Suffix (V_{in} = 8.0 V)	I_O	 50 65 65 80	 80 100 100 120	 – – – –	mA
Dropout Voltage I_O = 40 mA	$V_{in} - V_O$	–	0.5	0.7	V
Quiescent Current 30HT1 Suffix (V_{in} = 5.0 V) 33HT1 Suffix (V_{in} = 5.0 V) 40HT1 Suffix (V_{in} = 6.0 V) 50HT1 Suffix (V_{in} = 7.0 V)	I_{CC}	 – – – –	 1.1 1.1 1.2 1.3	 3.3 3.3 3.6 3.9	μA
Output Voltage Temperature Coefficient	T_C	–	±100	–	ppm/°C

2. Low duty pulse techniques are used during test to maintain junction temperature as close to ambient as possible.

DEFINITIONS

Dropout Voltage – The input/output voltage differential at which the regulator output no longer maintains regulation against further reductions in input voltage. Measured when the output drops 100 mV below its nominal value (which is measured at 1.0 V differential), dropout voltage is affected by junction temperature, load current and minimum input supply requirements.

Line Regulation – The change in output voltage for a change in input voltage. The measurement is made under conditions of low dissipation or by using pulse techniques such that average chip temperature is not significantly affected.

Load Regulation – The change in output voltage for a change in load current at constant chip temperature.

Maximum Power Dissipation – The maximum total device dissipation for which the regulator will operate within specifications.

Quiescent Bias Current – Current which is used to operate the regulator chip and is not delivered to the load.

OM SENI

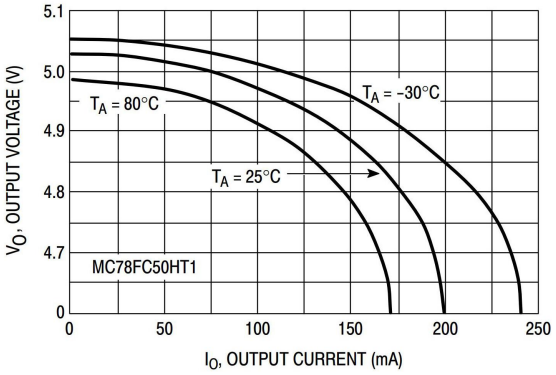

Figure 1. Output Voltage versus Output Current

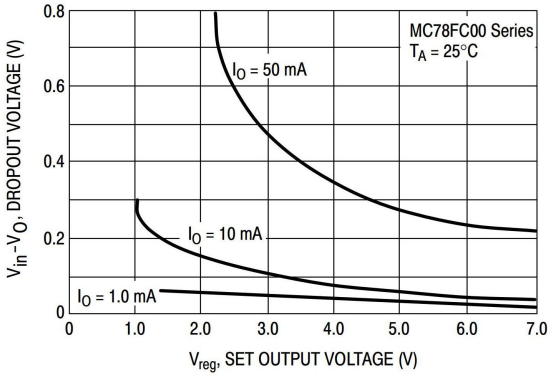

Figure 2. Dropout versus Set Output Voltage

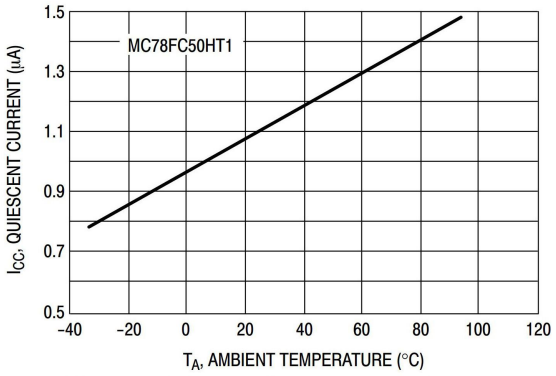

Figure 3. Quiescent Current versus Temperature

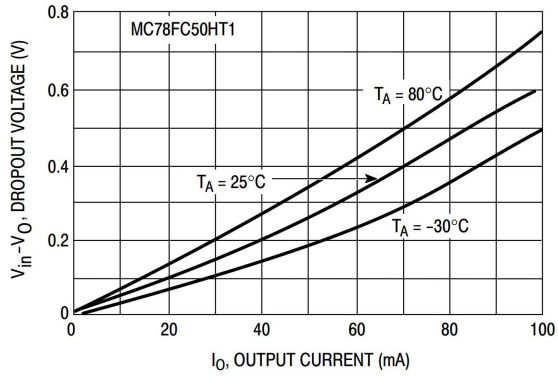

Figure 4. Dropout Voltage versus Output Current

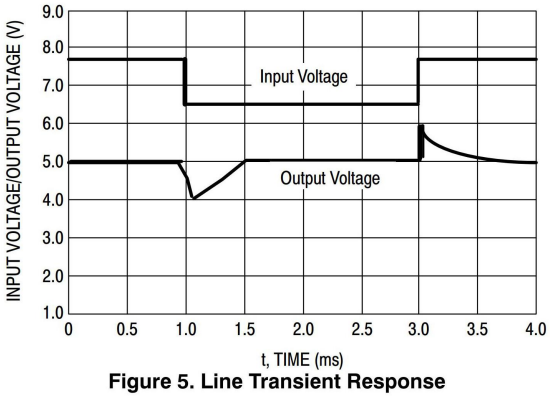

Figure 5. Line Transient Response

www.omseni.com

OM SENI

APPLICATIONS INFORMATION

Introduction

The MC78FC00 micropower voltage regulators are specifically designed with internal current limiting and low quiescent current making them ideal for battery powered applications. An input bypass capacitor is recommended if the regulator is located an appreciable distance (≥ 4 inches) from the input voltage source. These regulators require 0.1 μF capacitance between the output terminal and ground for stability. Most types of aluminum, tantalum or multilayer ceramic will perform adequately. Solid tantalums or other appropriate capacitors are recommended for operation below 25°C. The bypass capacitors should be mounted with the shortest possible leads or track lengths directly across the regulator input and output terminals.

With economical electrolytic capacitors, cold temperature operation can pose a serious stability problem. As the electrolyte freezes, around −30°C, the capacitance will decrease and the equivalent series resistance (ESR) will increase drastically, causing the circuit to oscillate. Quality electrolytic capacitors with extended temperature ranges of −40° to +85°C are readily available. Solid tantalum capacitors may be the better choice if small size is a requirement. However, a maximum ESR limit of 3.0 Ω must be observed over temperature to maintain stability.

Figure 6 is a typical circuit application. Figure 7 is a current boost circuit which can deliver more than 600 mA. The circuit has no current limiting and the external transistor must be rated for the expected power dissipation.

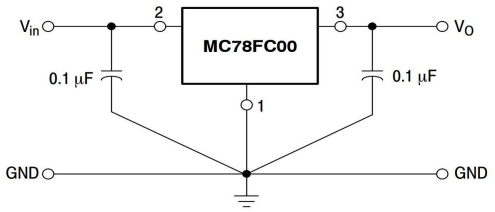

Figure 6. Typical Application

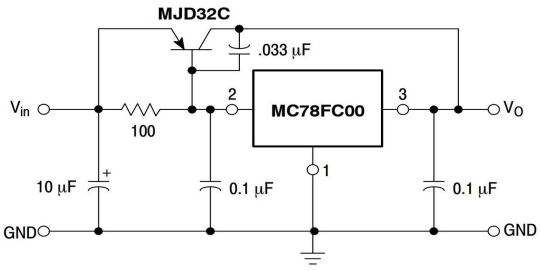

Figure 7. Current Boost Circuit

ORDERING INFORMATION

Device	Device Marking	Output Voltage	Operating Temperature Range	Package	Shipping†
MC78FC30HT1G	0K	3.0	T_A = −30° to +80°C	SOT−89 (Pb−Free)	1000 / Tape & Reel
MC78FC33HT1G	3K	3.3			
MC78FC40HT1G	0L	4.0			
MC78FC50HT1G	0M	5.0			

†For information on tape and reel specifications, including part orientation and tape sizes, please refer to our Tape and Reel Packaging

PACKAGE DIMENSIONS

SOT−89 (3−LEAD)
H SUFFIX
PLASTIC PACKAGE
CASE 1213−02
ISSUE C

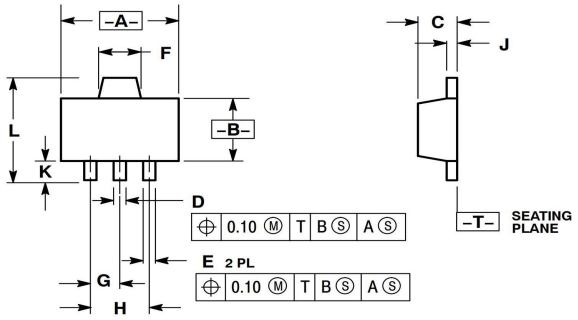

NOTES:
1. DIMENSIONING AND TOLERANCING PER ANSI Y14.5M, 1982.
2. CONTROLLING DIMENSION: MILLIMETERS
3. 1213−01 OBSOLETE, NEW STANDARD 1213−02.

	MILLIMETERS		INCHES	
DIM	MIN	MAX	MIN	MAX
A	4.40	4.60	0.173	0.181
B	2.40	2.60	0.094	0.102
C	1.40	1.60	0.055	0.063
D	0.37	0.57	0.015	0.022
E	0.32	0.52	0.013	0.020
F	1.50	1.83	0.059	0.072
G	1.50 BSC		0.059 BSC	
H	3.00 BSC		0.118 BSC	
J	0.30	0.50	0.012	0.020
K	0.80	---	0.031	---
L	---	4.25	---	0.167